LONG SEAMS	
COURSE	ORIENTATION
1	45°

*VERT – TOP TO BOTTOM

Ship loose items:
NONE

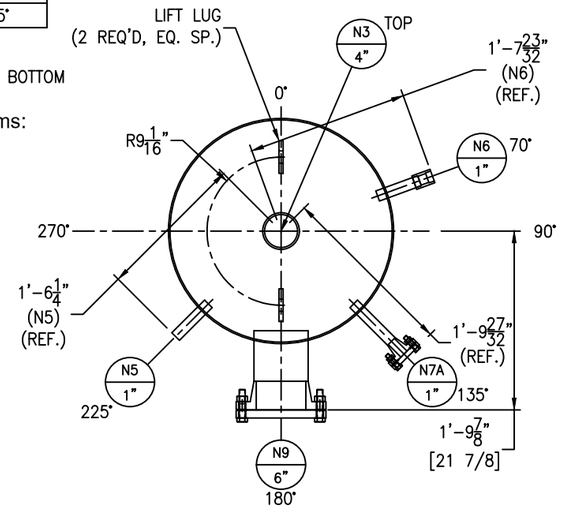

VIEW A-A

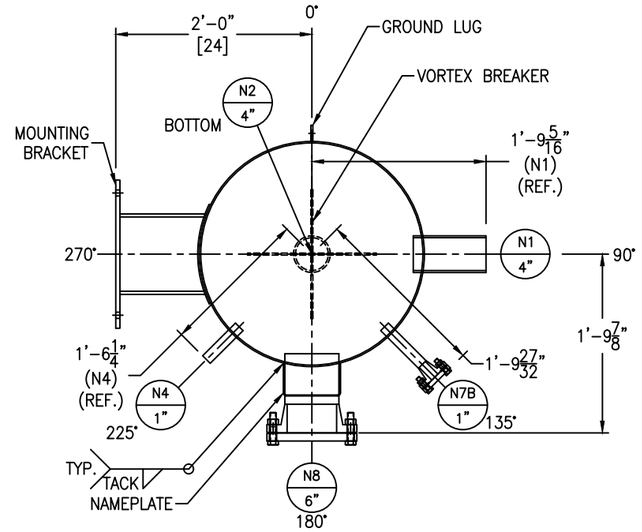

VIEW B-B

*NOTE: ALL ELEVATION ARE PULLED FROM
WELD SEAM FOR EASE OF FABRICATION

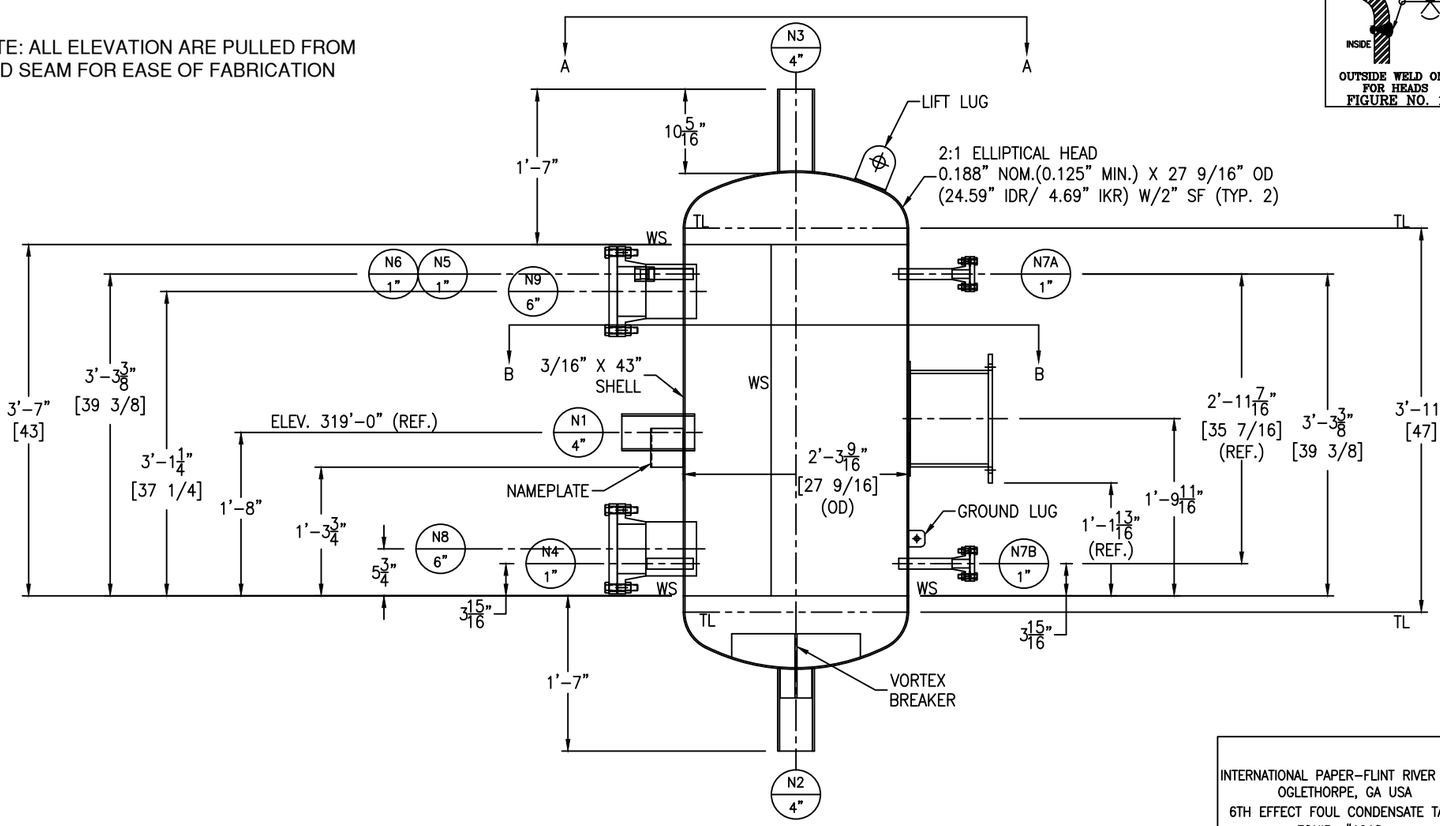

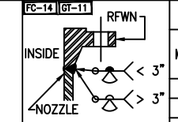

FIGURE NO. 2

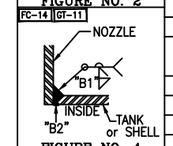

FIGURE NO. 4

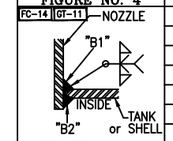

FIGURE NO. 7

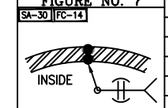

FIGURE NO. 9

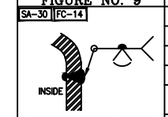

OUTSIDE WELD ONLY
FOR HEADS
FIGURE NO. 11

NOZZLE SCHEDULE

MARK	SERVICE	SIZE	RATING	TYPE / STYLE	NECK SCHED.	PROJECTION EXT. (℄)	PROJECTION INT. (MIN.)	WELD FIGURE	REPAD SIZE (WIDTH X THK.)	WELD SIZE "A1"	"A2"	"B1"	"B2"	"C1"	"C2"
N1	CONDENSATE IN	4"	–	PIPE	40S	SEE DWG.	1"	7	–	–	–	3/16	1/8	–	–
N2	CONDENSATE OUT	4"	–	PIPE	40S	SEE DWG.	–	4	–	–	–	1/4	1/8	–	–
N3	VAPOUR OUT	4"	–	PIPE	40S	SEE DWG.	–	4	–	–	–	1/4	1/8	–	–
N4	LEVEL MEASUREMENT	1"	–	THREADED PIPE	40S	SEE DETAIL	1"	7	–	–	–	3/16	3/16	–	–
N5	LEVEL MEASUREMENT	1"	–	THREADED PIPE	40S	SEE DETAIL	1"	7	–	–	–	3/16	3/16	–	–
N6	PRESSURE MEASUREMENT	1"	–	THREADED PIPE W/ COUPLING	40S	SEE DETAIL	1"	7	–	–	–	3/16	1/8	–	–
N7A	LEVEL GLASS	1"	CL150	RFWN W/ BLIND	40S	SEE DWG.	1"	2,7	–	–	–	3/16	1/8	–	–
N7B	LEVEL GLASS	1"	CL150	RFWN W/ BLIND	40S	SEE DWG.	1"	2,7	–	–	–	3/16	1/8	–	–
N8	INSPECTION HOLE	6"	CL150	RFWN W/ BLIND	40S	SEE DWG.	1"	2,7	–	–	–	3/16	1/8	–	–
N9	INSPECTION HOLE	6"	CL150	RFWN W/ BLIND	40S	SEE DWG.	1"	2,7	–	–	–	3/16	1/8	–	–

MATERIALS OF CONSTRUCTION

	VESSEL
SHELL	SA240–304/304L
HEADS	SA240–304/304L
REPADS	SA240–304/304L
SUPPORTS/HOLD DOWNS	SA240–304/304L
VORTEX BREAKER	SA240–304/304L
LIFTING LUGS	SA240–304/304L
GASKETS	GARLOCK 3000
BOLTS/STUDS	SA193–B7 (ZINC PLATED)
NUTS	SA194–2H (ZINC PLATED)
NOZZLE NECKS	SA312–304/304L WLD
NOZZLE FLANGES	SA182F–304/304L
COUPLINGS / PLUGS	SA182F–304/304L
GROUND LUG	SA240–304/304L
MANWAY FLANGES	–
INSULATION RINGS	–
RIM ANGLE	–
VACUUM RINGS	–
LADDER	–
TANK CLIPS (LADDER)	–
HANDRAIL	–
HANDRAIL CLIPS	–
PLATFORM	–
PLATFORM CLIPS	–
DIPTUBE SUPPORT	–
JACKET SHELL	–
JACKET HEADS	–
JACKET NOZZLE NECKS	–
JACKET NOZZLE FLANGES	–

DESIGN DATA

	VESSEL
DESIGN AND FAB. CODE	ASME
CERT. STAMP REQ'D.	YES
DESIGN PRESSURE	60 PSIG / FV
DESIGN TEMPERATURE	300° F
MIN. DESIGN METAL TEMP.	–20° F @ 60 PSIG
OPERATING PRESSURE	–
OPERATING TEMPERATURE	–
JOINT EFFICIENCY HEADS	0.85
JOINT EFFICIENCY SHELL	0.70
CORROSION ALLOWANCE	0"
SPECIFIC GRAVITY	1.0
EARTHQUAKE ZONE	Ss = (0.121) S1 = (0.071)
WIND LOAD	108 MPH
STRESS RELIEF	NOT REQ'D
RADIOGRAPHIC EXAM	NOT REQ'D
DYE PENETRANT EXAM	NOT REQ'D
MAGNETIC PARTICLE EXAM	NOT REQ'D
HYDROSTATIC TEST	83 PSIG / GAUGE #9
PNEUMATIC TEST	–
JKT HYDRO TEST	–
JKT DESIGN AND FAB. CODE	–
JKT CERT. STAMP REQ'D.	–
JKT DESIGN PRESSURE	–
JKT DESIGN TEMPERATURE	–
JKT MIN. DESIGN METAL TEMP.	–
JKT OPERATING PRESSURE	–
JKT OPERATING TEMPERATURE	–
JKT JOINT EFFICIENCY HEADS	–
JKT JOINT EFFICIENCY SHELL	–

VESSEL FINISH

INTERIOR WELD TREATMENT:	SAV TANK STANDARD
EXTERIOR WELD TREATMENT:	SAV TANK STANDARD
SAV TANK FINISHING STANDARD:	SEE NOTE 6
INSULATION:	N/A
PAINTING:	N/A

VESSEL CAPACITY AND WEIGHTS

OPERATING CAPACITY	–
FULL CAPACITY	140 GAL.
EMPTY SHIPPING WEIGHT	700 LBS.
WEIGHT FULL OF WATER	1,900 LBS.
WEIGHT FULL OF PRODUCT	1,900 LBS.

INTERNATIONAL PAPER–FLINT RIVER MILL
OGLETHORPE, GA USA
6TH EFFECT FOUL CONDENSATE TANK
EQUIP. #1918

ASME SECT. VIII, DIV. 1
2021 EDITION

ENG. _____ DATE: _____
Q.C. _____ DATE: _____
A.I. _____ DATE: _____

This drawing is issued for customer approval. please review, make approval changes (if any) in red. check the appropriate box, sign & date.

- ☐ Approval – no changes. Please proceed with fabrication.
- ☐ Approved as noted. Please proceed with fabrication
- ☐ Not approved. Please make changes and resubmit.

Customer signature _____ Date _____

GENERAL NOTES

1.) COVER ALL FLANGES, OPENINGS & MACHINED SURFACES PRIOR TO SHIPMENT UNLESS OTHERWISE NOTED.
2.) BOLT HOLES TO STRADDLE 0° & 180° UNLESS OTHERWISE NOTED.
3.) REPADS TO HAVE (1) ø1/4" NPT TELL–TALE HOLES FOR PNEUMATIC TESTING AT 2 PSIG FOR PRESSURE RETAINING PARTS. ALL OTHER REPADS TO HAVE (1) ø1/4" WEEP HOLE AT LOWEST POINT ON PAD.
4.) ASME CODE VESSELS TO BE IN ACCORDANCE WITH UG–80 & UG–81. TOLERANCES: +/– 1/8" FOR DIMENSIONS AND +/– 2 DEGREES FOR ORIENTATIONS.
5.) ASME MATERIALS TO CONFORM TO THE FOLLOWING: FLANGES – B16.5, FITTINGS – B16.9 & COUPLINGS – B16.11.
6.) PICKLE ALL EXTERIOR WELDS. PASSIVATE INTERIOR & EXTERIOR OF VESSEL.

⚠ REVISIONS

REV	D.BY	C.BY	DATE	DESCRIPTION
3				AS BUILT
2	AD	–	5/22/25	CERTIFIED
1	AD	RS	4/15/25	APPROVAL REV 1
0	AD	RS	3/24/25	APPROVAL

Savannah Tank & Equipment Corp.
1517 Telfair Road, Savannah, GA 31415
(912) 233–8902

DRAWN BY: AD
CHK'D BY: RS
APPROVED BY: NP
SCALE: 1" = 1'–0"

ANDRITZ INC.
6TH EFFECT FOUL CONDENSATE TANK
EQUIP. #1918
CUST. PO #4504578221

DRAWING NO.: 042–25–1 SHT 1 OF 2 REV. SET 2

FC-14

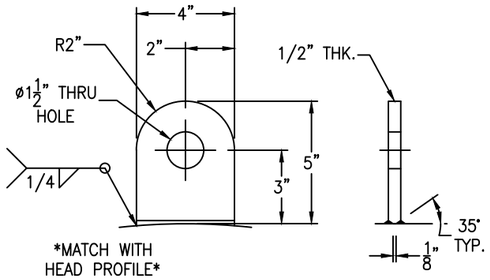

TANK WT. <= 5000#
SHACKLE PIN DIA. = 3/4"

HEAD LIFT LUG DETAIL

(2 REQ'D) SCALE: 3" = 1'-0"

FC-14

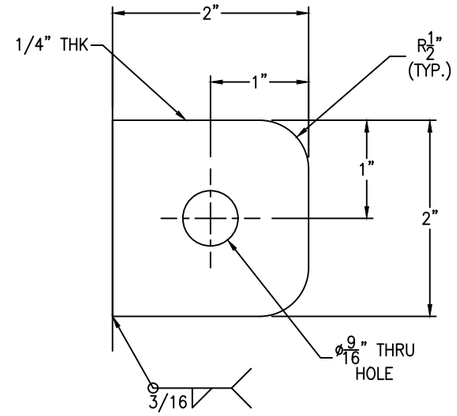

GROUND LUG DETAIL

SCALE: 1'-0" = 1'-0"

FC-14

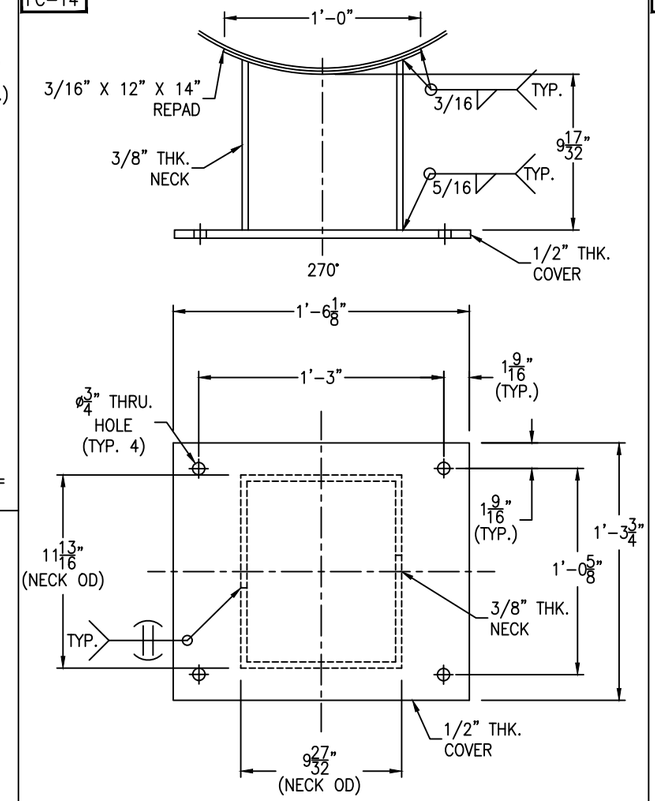

MOUNTING BRACKET DETAIL

SCALE: 2" = 1'-0"

FC-14

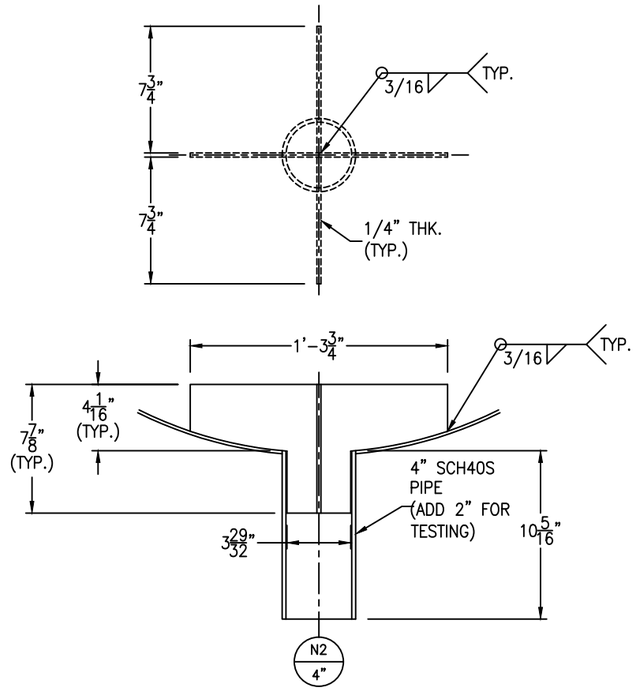

NOZ. N2 & VORTEX BREAKET DETAIL

SCALE: 2" = 1'-0"

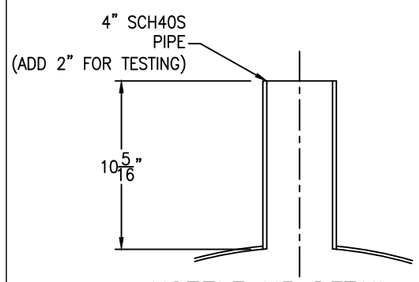

NOZZLE N3 DETAIL

SCALE: 2" = 1'-0"

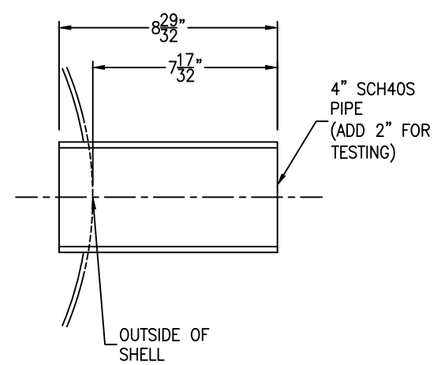

NOZZLE N1 DETAIL

SCALE: 3" = 1'-0"

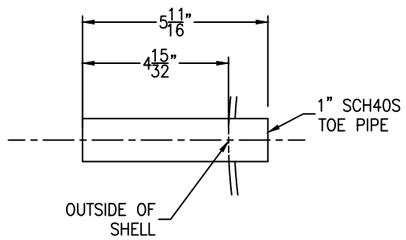

NOZZLE N4 & N5 DETAIL

SCALE: 4" = 1'-0"

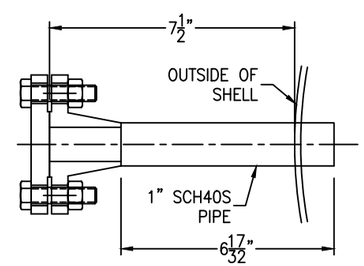

NOZZLE N7A & N7B DETAIL

SCALE: 4" = 1'-0"

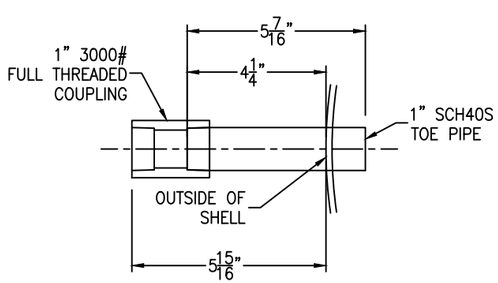

NOZZLE N6 DETAIL

SCALE: 4" = 1'-0"

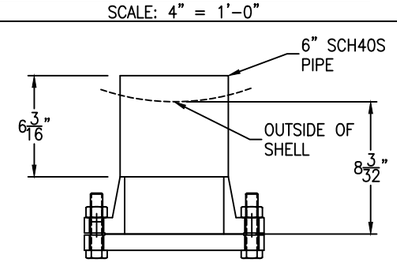

NOZZLE N8 & N9 DETAIL

SCALE: 2" = 1'-0"

N8

CERTIFIED BY
Savannah Tank & Equipment Corp.
1517 TELFAIR ROAD, GARDEN CITY, GEORGIA 31415
(912) 233-8902

U

VESSEL: MAX. ALLOW. WORKING PRESS:	60	PSI @	300	F
VESSEL: MAX. ALLOW. EXT. WORKING PRESS:	14.7	PSI @	300	F
VESSEL: MIN. DESIGN METAL TEMP:	-20	F @	60	PSI
:MAX. ALLOW. WORKING PRESS:	-	PSI @	-	F
:MAX. ALLOW. EXT. WORKING PRESS:	-	PSI @	-	F
:MIN. DESIGN METAL TEMP:	-	F @	-	PSI

MFG. SERIAL NO. 042-25 YEAR BUILT 2025
MAT'L VESSEL: SA240-304/304L
MAT'L :

NOMENCLATURE: 6TH EFFECT FOUL CONDENSATE TANK
EQUIPMENT NO: 1918 P.O. NO: 4504578221

NAMEPLATE DETAIL

SCALE: 1'-0" = 1'-0"

Bolting for blinds

N7A: (4) 1/2" - 13 NC x 2" HH BOLT
(4) 1/2" - 13 NC HH NUT
(1) 1" 150# RING GASKET x 1/8" THK.

N7B: (4) 1/2" - 13 NC x 2" HH BOLT
(4) 1/2" - 13 NC HH NUT
(1) 1" 150# RING GASKET x 1/8" THK.

N8: (8) 3/4" - 10 NC x 3 1/2" HH BOLT
(8) 3/4" - 10 NC HH NUT
(1) 6" 150# RING GASKET x 1/8" THK.

N9: (8) 3/4" - 10 NC x 3 1/2" HH BOLT
(8) 3/4" - 10 NC HH NUT
(1) 6" 150# RING GASKET x 1/8" THK.

REV	D.BY	C.BY	DATE	DESCRIPTION
3				AS BUILT
2	AD	–	5/22/25	CERTIFIED
1	AD	RS	4/15/25	APPROVAL REV 1
0	AD	RS	3/24/25	APPROVAL

⚠ REVISIONS

Savannah Tank & Equipment Corp.
1517 Telfair Road, Savannah, GA 31415
(912) 233-8902

DRAWN BY: AD
CHK'D BY: NS
APPROVED BY: NP
SCALE: 1" = 1'-0"

ANDRITZ INC.
6TH EFFECT FOUL CONDENSATE TANK
EQUIP. #1918
CUST. PO #4504578221

DRAWING NO.: 042-25-2 SHT 2 OF 2 REV. SET 2